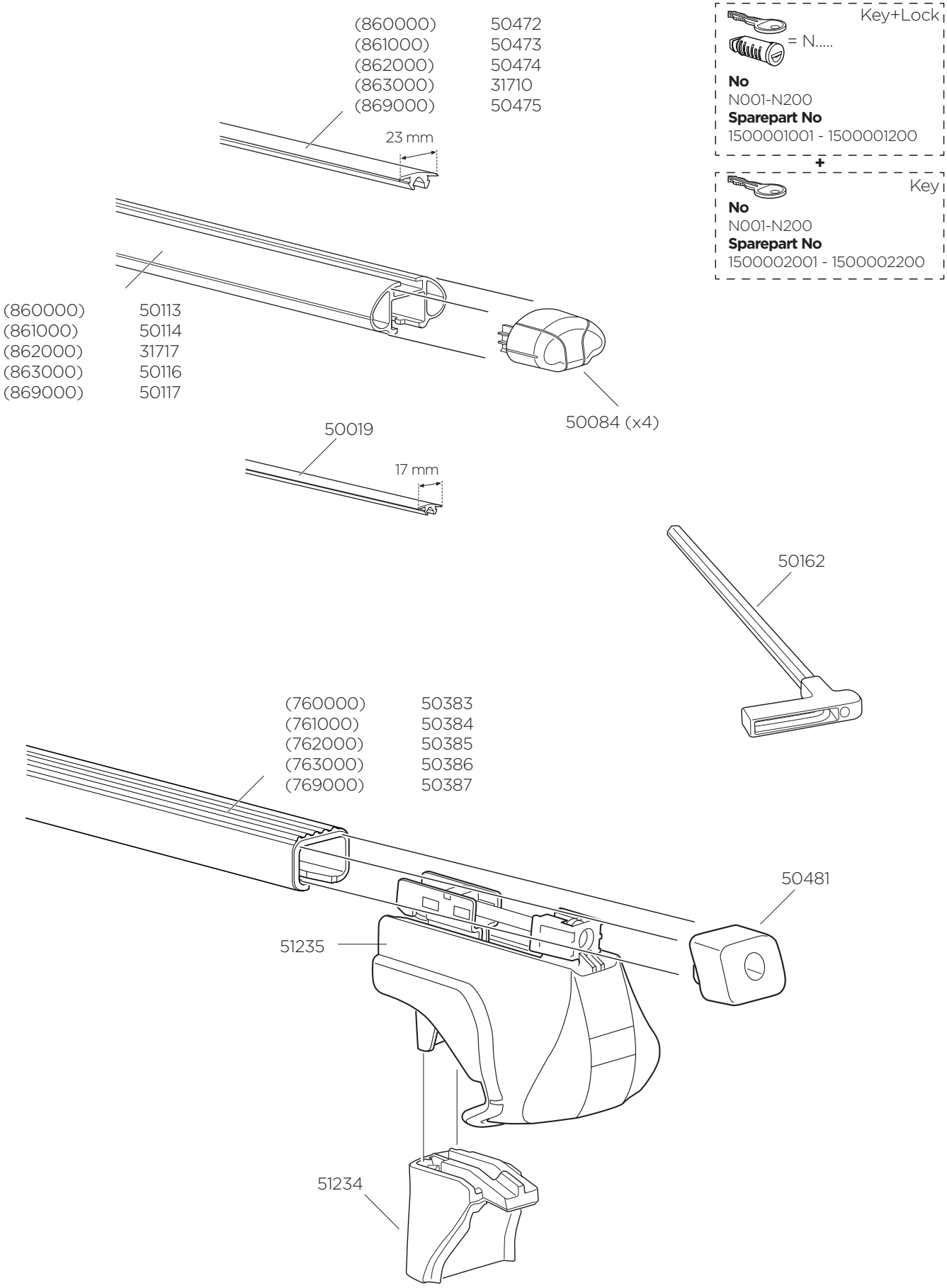
(860000) 50472
(861000) 50473
(862000) 50474
(863000) 31710
(869000) 50475
23 mm
Key+Lock
= N.....
No
N001-N200
Sparepart No
1500001001 - 1500001200
+
Key
No
N001-N200
Sparepart No
1500002001 - 1500002200
(860000) 50113
(861000) 50114
(862000) 31717
(863000) 50116
(869000) 50117
50084 (x4)
50019
17 mm
50162
(760000) 50383
(761000) 50384
(762000) 50385
(763000) 50386
(769000) 50387
50481
51235
51234